Customer/客户:

Li-ion Polymer Battery Specification

锂离子聚合物电池说明书

MODEL/型号: TW503035-500MAH

Prepared By 编 制	Checked By 审 核	Approved By 批 准

Customer Approval	**Signature/Date(签名/日期)**
	Company Name(公司名称)
	Company Stamp(公司印章)

Amendment Records

（修正记录）

Edition (版 本)	Description （记 述）	Prepared by （编 制）	Approved by （批 准）	Date （日 期）
A	First Edition			

1.Scope（适用范围）

This specification is applied to the reference battery in this Specification and manufactured

2. Product Specification（产品技术规格）

Table 1 (表 1)

No. (序号)	Item （项目）	General Parameter (常规参数)		Remark （备注）
1	Rated Capacity （额定容量）	Typical （标称容量）	500mAh	Standard discharge（0.2C C_5A) after Standard charge （标准充电后 0.2C_5A 标准放电）
		Minimum （最小容量）	480mAh	
2	Nominal Voltage （正常电压）	3.7V		Mean Operation Voltage （即工作电压）
3	Voltage at end of Discharge （放电终止电压）	2.4V±0.1V		Discharge Cut-off Voltage （放电截止电压）
4	Charging Voltage (充电电压)	4.28±0.05V		
5	Internal Impedance (成品内阻)	≤250mΩ		Internal resistance measured at AC 1KH_Z after 50% charge （半电态下用交流法测量内阻） The measure must uses the new batteries that within one week after shipment and cycles less than 5 times (使用出货后不到一个星期及循环次数少于 5 次的新电池测量)
6	Standard charge （标准充电）	Constant Current 0.5C_5A Constant Voltage 4.2V 0.01 C_5A cut-off （持续电流：0.5C_5A 持续电压：4.2V 截止电流：0.01 C_5A）		Charge time : Approx 4.5h （充电时间：大约 4-4.5 小时）
7	Standard discharge （标准放电）	Constant current 0.5 C_5A end voltage3.0V （持续电流：0.5C_5A 截止电压：3.0V）		
8	Fast charge (快速充电)	Constant Current 1.0C_5A Constant Voltage 4.2V 0.01 C_5A cut-off （持续电流：1.0C_5A 持续电压：4.2V 截止电流：0.01 C_5A）		Charge time : Approx 4h （充电时间：大约 3.5-4 小时）

Continuous the table 1 (续 表 1)

No. (序号)	Item （项目）	General Parameter (常规参数)	Remark （备注）
9	Fast discharge (快速放电)	Constant current 1.0 C_5A end voltage 3.0V （持续电流：1.0C_5A 截止电压：3.0V）	
10	Maximum Continuous Charge Current (最大充电持续电流)	1.0 C_5A	
11	Maximum Continuous Discharge Current （最大放电持续电流）	1.0 C_5A	
12	Operation Temperature Range （工作温度范围）	Charge（充电）: 0~45℃	60±25%R.H. Bare Cell （单体电池储存湿度范围）
		Discharge（放电）: -20~60℃	
13	Storage Temperature Range （储存温度范围）	Less than 1 year: -20~25℃ （小于一年：-20~25℃）	60±25%R.H. at the shipment state （出货状态时的湿度范围）
		less than 3 months: -20~40℃ （小于 3 个月：-20~40℃）	
14	Initial Dimension （初始尺寸）	Height: Max36mm (高度：最大 36mm	Initial Dimension （初始尺寸）
		Width: Max30.5mm (宽度：最大 30.5mm)	
		Thickness: max5.2mm (厚度：最大 5.2mm)	
15	Cycle life 循环寿命	With a current of 0.2C charge and discharge the battery to make the loop and recording the capacity until the battery capacity is low as 80% of the initial capacity. 以 0.2C 的电流对电池充放电做循环,并记录容量,直至电池容量低至初始容量的 80%.	Battery should not explode smoke, burn or burst. charge and discharge cycle life should more than 300 times 电池不能有爆炸,冒烟,燃烧,变形等现象。 充放电循环寿命应≥300 次。

3.Performance And Test Conditions (电池性能及测试条件)

3.1 Standard Test Conditions（标准测试条件）

Test should be conducted with new batteries within one week after shipment from our factory and the cells shall not be cycled more than five times before the test. Unless otherwise specified, test and measurement shall be done under temperature of 20±5℃ and relative humidity of 45~85%. If it is judged that the test results are not affected by such conditions, the tests may be conducted at temperature 15~30℃ and humidity 25~85%RH.

测试必须使用出厂时间不超过一个星期的新电池，且未进行过五次以上的充放电循环。除非特别说明，否则测试会在温度 20±5℃，相对湿度 45~85%的条件下进行。如果经鉴定测试结果不受上述条件影响，测试也可以在温度 15~30℃，相对湿度 25~85%RH 的条件下进行。

3.2 Measuring Instrument or Apparatus（测量器具及设备）

3.2.1 Dimension Measuring Instrument（尺寸测量器具）

The dimension measurement shall be implemented by instruments with equal or more precision scale of 0.01mm.

尺寸测量器具的精度等级应不小于 0.01 mm 。

3.2.2 Voltmeter（伏特计）

Standard class specified in the national standard or more sensitive class having inner impedance more than 10kΩ/V

按照国家标准指定规格等级或采用灵敏度更高的，测量电压时内阻不应小于 10kΩ/V。

3.2.3 Ammeter（安培计）

Standard class specified in the national standard or more sensitive class. Total external resistance including ammeter and wire is less than 0.01Ω.

按照国家标准指定规格等级或采用灵敏度更高的，包括电流表及电线在内的总外阻应小于 0.01Ω。

3.2.4 Impedance Meter（电阻计）

Impedance shall be measured by a sinusoidal alternating current method(1kHz LCR meter).

内阻测试仪测量原理应为交流阻抗法（1kHz LCR）。

3.3 Standard Charge\Discharge（标准充放电）

3.3.1 Standard Charge ：Test procedure and its criteria are referred as follows:

标准充电：测试过程及标准如下：

$0.5C_5A$ =250mA

Charging shall consist of charging at a $0.5C_5A$ constant current rate until the cell reaches 4.2V. The cell shall then be charged at constant voltage of 4.2 volts while tapering the charge current. Charging shall be terminated when the charging current has tapered to 0.01 C_5A . Charge time : Approx 4.0h, The cell shall demonstrate no permanent degradation when charged between 0 ºC and 45 ºC.

电池先 $0.5C_5A$ 恒流充至 4.2V，当充电电流逐渐减小时再以 4.2V 恒压充至电流减小到 0.01 C_5A，充电时间大约为 4 个小时。在 0℃-45℃内充电电池应没有永久损害。

3.3.2 Standard Discharge（标准放电）

$0.2C_5A$ =100mA

Cells shall be discharged at a constant current of 0.2 C_5A to 3.0 volts @ 20º ± 5C

电池以 0.2 C_5A 恒流放电至 3.0V @ 20º ± 5C

3.3.3 If no otherwise specified, the rest time between Chare and Discharge amount to 30min.

如果没有特别说明，电池充放电间隔时间为 30 分。

3.4 Appearance（外观）

There shall be no such defect as flaw, crack, rust, leakage, which may adversely affect commercial value of battery.

电池外观应没有划伤、破裂、污渍、生锈、漏液等影响市场价值的缺陷存在。

3.5 Initial Performance Test（初始性能测试）

Table 2（表 2）

Item （项目）	Test Method and Condition （测试方法及条件）	Requirements （要求）
(1) Open-Circuit Voltage （开路电压）	The open-circuit voltage shall be measured within 24 hours after standard charge. （标准充电后 24 小时内测量开路电压）	≥4.18V
(2) Internal impedance (初始内阻)	Internal resistance measured at AC 1KHz after 50% charge. （半充电状态下，测量其 AC 1KHz 下的交流阻抗）	≤120mΩ
(3) Minimal Rated Capacity (最小额定容量)	The capacity on 0.2C_5A discharge till the voltage tapered to 3.0V shall be measured after rested for 30min then finish standard charge. (标准充电后，搁置 30min，测量 0.2C 放电至 3.0V 截止电压所放出的容量)	Discharge Capacity （放电容量） ≥480mAh

3.6 Temperature Dependence of discharge capacity（放电温度特性）

Cells shall be charged per 3.3.1 and discharged @0.2 C_5A to 3.0 volts. Except to be discharged at temperatures per Table 3. Cells shall be stored for 3 hours at the test temperature prior to discharging and then shall be discharged at the test temperature. The capacity of a cell at each temperature shall be compared to the capacity achieved at 23 ºC and the percentage shall be calculated. Each cell shall meet or exceed the requirements of Table 3.

电池按 3.3.1 规定充电。按表 3 的温度中放电，电池必须先在该试验温度中放置 3 个小时。在每一个温度中的放电容量应不小于表 3 的要求。

Table 3 （表 3）

Discharge Temperature （放电温度）	-10℃	0℃	23℃	60℃
Discharge Capacity （0.2 C_5A） （放电容量/0.2 C_5A）	70%	85%	100%	85%

3.7 Cycle Life and Leakage-Proof（循环寿命及漏液试验）

Table 4（表 4）

No. （序号）	Item （项目）	Criteria （标准）	Test Conditions （测试条件）
1	Cycle Life （循环寿命） (0.5 C_5A)	Higher than 80% of the Initial Capacities of the Cells （初始容量的 80%）	Carry out 300cycle Charging/Discharging in the below condition. ◆Charge:Standard Charge, per 3.3.1 ◆Discharge:0.5 C_5A to 3.0 V ◆Rest Time between charge/discharge:30min. ◆Temperature:20±5℃ 循环 300 次 充放电按以下条件： ◆充电: 标准充电, 按 3.3.1 规定 ◆放电:0.5 C_5A 放至 3.0V ◆搁置:30min. ◆温度:20±5℃
2	Leakage-Proof （漏液试验）	No leakage (visual inspection) （没有漏液/目测）	After full charge with standard charge, store at 60±3℃, 60±10%RH for 1 month. 标准充电条件下充满电后在温度 60±3℃，湿度 60±10%RH 下储存一个月

3.8 产品特性曲线

3.8.1 不同倍率充电曲线

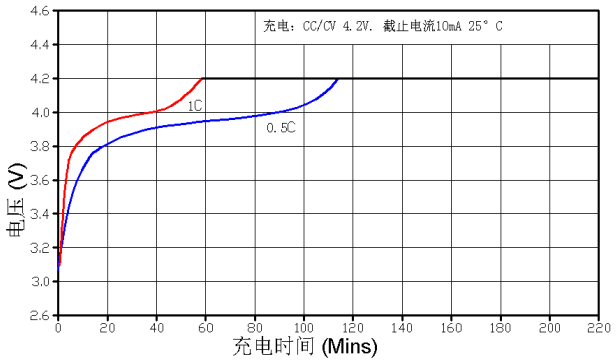

3.8.2 不同倍率放电曲线

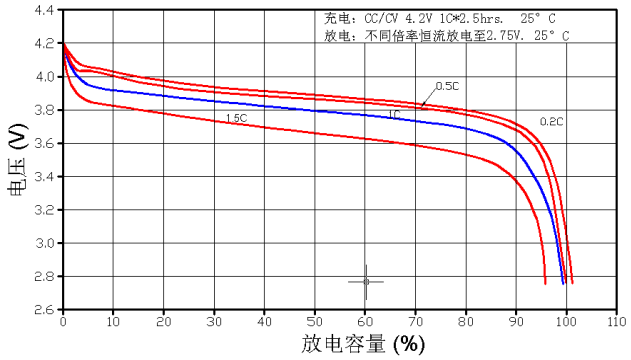

3.8.3 不同温度放电曲线

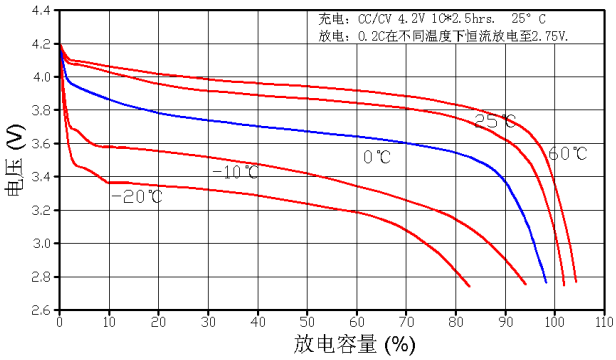

3.8.4 循环寿命曲线

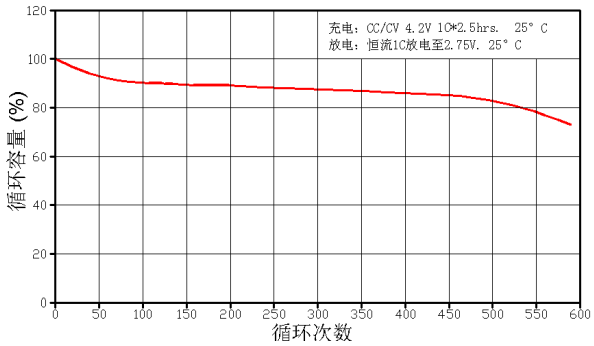

4.Mechanical characteristics and Safety Test（安全测试及机械特性）

Table 5（表 5） (Mechanical characteristics)

No. (序号)	Items （项目）	Test Method and Condition （测试方法及条件）	Criteria （标准）
1	Vibration Test （组件）振动测试	The standard charge batteries is fixed on the vibration table, vibration for 10 minutes,CPM test speed: 150-150, the vibration frequency of 2.5 Hz ~ 3 Hz, 将标准充电后的电芯固定在振动台上，振动 10 分钟，测试速度：150-180CPM，振动频率为 2.5Hz~3Hz，	12 to 24 hours after the testing, finished product testing are not allowed to have a bad product 搁置 12-24H，成品测试不允许有不良品
2	Drop Test 跌落测试	The cell is to be dropped from a height of 1 meter twice onto concrete ground. 将标准充电后的电芯从 1 米高度跌落至混凝土地面 2 次	No explosion, No fire, no leakage. 无爆炸、无起火 、无泄漏

Table 6（表 6） (Safety Test)

Item （项目）	Battery Condition （电池要求）	Test Method （测试方法）	Requirements （要求）
Short Circuit （短路试验 20℃）	Fresh, Fully charged （充满电的新电池）	Each test sample battery, in turn, is to be short-circuited by connecting the (+) and (-) terminals of the battery with a Cu wire having a maximum resistance load of 0.1Ω.Tests are to be conducted at room temperature(20±2℃). （在常温下约 20±2℃依次把每个样品电池的正负极用铜线连接起来使电池外部短路--线路总电阻不超过 0.1Ω）	No explosion, No fire The Temperature of the surface of the Cells are lower than 150℃ (无起火无爆炸电池表面温度应低于 150℃)
Short Circuit （短路试验 60℃）	Fresh, Fully charged （充满电的新电池）	Each test sample battery, in turn, is to be short-circuited by connecting the (+) and (-) terminals of the battery with a Cu wire having a maximum resistance load of 0.1Ω.Tests are to be conducted at temperature(60±2℃). （在常温下约 60±2℃依次把每个样品电池的正负极用铜线连接起来使电池外部短路--线路总电阻不超过 0.1Ω）	No explosion, No fire The Temperature of the surface of the Cells are lower than 150℃ (无起火无爆炸电池表面温度应低于 150℃)
Forced Discharge （过放试验）	Fresh, Fully charged （充满电的新电池）	Discharge at a current of 1 C_5A for 2.5h. （以 1CmA 的电流放电 2.5 小时）	No explosion, No fire (无起火无爆炸)

5. Handling of Cells （电池操作注意事项）

5.1 Consideration of strength of film package (包装薄膜注意事项)

1) Soft Aluminium foil（铝箔软包装）

Easily damaged by sharp edge parts such as pins and needles, Ni-tabs, comparing with metal-can-cased LIB.

相对于金属壳的方形电池，铝箔软包装比较容易被锐利部件刺损，如针尖、镍带。

2).Sealed edge may be damaged by heat above 100°C, bend or fold sealed edge.

封边被加热到 100°C 以上以及弯折封边都容易使封边受损。

5.2 Prohibition short circuit（禁止电池短路）

Never make short circuit cell. It generates very high current which causes heating of the cells and may cause electrolyte leakage, gassing or explosion that are very dangerous.

The LIP tabs may be easily short-circuited by putting them on conductive surface.

Such outer short circuit may lead to heat generation and damage of the cell.

An appropriate circuitry with PCM shall be employed to protect accidental short circuit of the battery pack.

避免电池短路。短路会产生很高的电流而使电池发热以及电解液泄漏，产生有毒气体或爆炸是非常危险的。极片连接在导电物体表面很容易短路，外部短路会导致发热及损害电池。选用一个适当的保护电路可以在意外短路时保护电池。

5.3.Mechanical shock（机械撞击）

LIP cells have less mechanical endurance than metal-can-cased LIB.

Falling, hitting, bending, etc. may cause degradation of LIP characteristics.

聚合物电池比金属壳方形电池的机械耐久性更小。

跌落、碰撞、弯曲等等都可能会降低聚合物电池的性能。

5.4 Handling of tabs（极片操作注意事项）

The battery tabs are not so stubborn especially for aluminum tab.

Don’t bend tab.

Do not bend tabs unnecessarily.

极片的机械强度并非异常坚固，特别是铝片。没有必要时禁止弯折极片。

6.Notice for Designing Battery Pack（电池外壳设计注意事项）

6.1 Pack toughness（外壳坚韧度）

Battery pack should have sufficient strength and the LIP cell inside should be protected from mechanical shocks.

电池外壳应该有足够的机械强度使聚合物电池免受机械撞击。

6.2 Cell fixing（电池的固定）

The LIP cell should be fixed to the battery pack by its large surface area.

No cell movement in the battery pack should be allowed.

电池最大面积的一面应该固定在外壳上，安装后电池不能有松动。

6.3Inside design（外壳内部设计）

No sharp edge components should be insides the pack containing the LIP cell.

外壳内安装电池的部位不应有锋锐边。

6.4Tab connection （极片连接）

Ultrasonic welding or spot welding is recommended for LIP tab connection method.

Battery pack should be designed that shear force are not applied to the LIP tabs.

If apply manual solder method to connect tab with PCM, below notice is very important to ensure battery performance:

- The solder iron should be temperature controlled and ESD safe;
- Soldering temperature should not exceed 350°C;
- Soldering time should not be longer than 3s;
- Soldering times should not exceed 5 times, Keep battery tab cold down before next time soldering;
- Directly heat cell body is strictly prohibited, Battery may be damaged by heat above approx. 90°C

建议使用超声波或点焊焊接方法；外壳设计应使极片不受外力。

如果使用人工焊接保护板，下面的注意事项对于确保电池性能非常重要：

- 焊接铬铁的温度必须可控且可防静电；
- 焊接时铬铁的温度不能超过 350℃；
- 焊锡时间不能超过 3 秒钟；
- 焊锡次数不能超过 5 次，待极片冷却后才能进行下一次焊锡；

严禁直接加热电芯，高于 90℃度会损害电芯。

6.5 For mishaps（针对意外事件）

Battery pack should be designed not to generate heat even when leakage occurs due to mishaps.

1) Isolate PCM (Protection Circuit Module) from leaked electrolyte as perfectly as possible.
2) Avoid narrow spacing between bare circuit patterns with different voltage. (Including around connector)
3) LIP battery should not have liquid from electrolyte, but in case If leaked electrolyte touch bare circuit patterns, higher potential terminal material may dissolve and precipitate at the lower potential terminal, and may cause short circuit. The design of the PCM must have this covered.

发生意外时外壳设计应考虑即使在电池出现漏液时也不会发热。

1、尽量把保护电路与渗漏的电解液隔离开。
2、在不同的电压情况下避免出现小间距的裸露电路——包括插头周围。
3、聚合物电池不应该有来自电解液的液体，但是一但发生电解液渗漏触及裸露电路，高电势端接子材料可能会溶解然后沉淀到低电势端接子，可能会造成短路。保护板的设计必须含有覆盖保护层。

7. Notice for Assembling Battery Pack（电池装配注意事项）

Shocks, high temperature, or contacts of sharp edge components should not be allowed in battery pack assembling process.

在电池装配过程中不允许撞击、高温或接触尖锐部分。

8. Others（其它）

8.1.Cell connection（电池连接）

1) Direct soldering of wire leads or devices to the cell is strictly prohibited.
2) Lead tabs with pre-soldered wiring shall be spot welded to the cells.

Direct soldering may cause damage of components, such as separator and insulator, by heat generation.

1、严禁直接焊接引线或设备到电池上。
2、极片在焊接引线之前应该先点焊到电池上，直接与电池热焊接，产生的热量会使电池的隔离体及绝缘体受损。

8.2.Prevention of short circuit within a battery pack（电池内部的短路预防）

Enough insulation layers between wiring and the cells shall be used to maintain extra safety protection.

The battery pack shall be structured with no short circuit within the battery pack, which may cause generation of smoke or firing.

在电池和引线之间应该有足够的绝缘层用于安全保护。电池的包装构成应没有导致起烟起火的短路情

8.3.Prohibition of disassembly （禁止拆卸）

1) Never disassemble the cells

The disassembling may generate internal short circuit in the cell, which may cause gassing, firing, explosion, or other problems.

2) Electrolyte is harmful

LIP battery should not have liquid from electrolyte flowing, but in case the electrolyte come into contact with the skin, or eyes, physicians shall flush the electrolyte immediately with fresh water and medical advice is to be sought.

1、不要拆卸电池。

拆卸电池会发生电池内部短路，会引起起火、爆炸、有害气体或者其它问题。

2、电解液是有害的

万一电解液沾到皮肤、进入眼睛，应立即用清水冲洗以及求助医生。

8.4Prohibition of dumping of cells into fire（不要把电池倾倒于火中）

Never incinerate nor dispose the cells in fire. These may cause explosion of the cells, which is very dangerous and is prohibited.

不要焚毁电池，否则会致电池爆炸，这个很危险，必须禁止。

8.5Prohibition of cells immersion into liquid such as water（禁止浸泡电池）

The cells shall never be soaked with liquids such as water, seawater, drinks such as soft drinks, juices, coffee or others.

请不要把电池浸泡在液体当中，像清水、海水，及非酒精饮料、果汁、咖啡或者其它的饮料。

8.6Battery cells replacement（更换电池）

The battery replacement shall be done only by either cells supplier or device supplier and never be done by the user.

更换电池应由电池生产商或设备供应商完成，用户不要自行更换。

8.7Prohibition of use of damaged cells（禁止使用损坏的电池）

The cells might be damaged during shipping by shock. If any abnormal features of the cells are found such as damages in a plastic envelop of the cell, deformation of the cell package, smelling of an electrolyte, an electrolyte leakage and others, the cells shall never be used any more.

The Cells with a smell of the electrolyte or a leakage shall be placed away from fire to avoid firing or explosion.

电池可能在出货途中碰撞而受损。如果发现电池有异常，例如包装损坏、电池包裹变形，有电解液的味道、发现漏液等等，不要再使用这些电池。

电池如果有电解液的味道或者出现漏液，电池放置应该远离火源避免起火及爆炸。

9. Period of Warranty（保质期）

The period of warranty is a year from the date of shipment. Power Tech International guarantees to give a replacement in case of cells with defects proven due to manufacturing process instead of the customer abuse and misuse.

电池的保质期从出货之日算起为壹年。如果证明电池的缺陷是在制造过程中形成的而不是由于用户滥用及错误使用造成，本公司负责退换电池。

10. Storing the Batteries （电池的存放）

The batteries should be stored at room temperature, charged to about 30% to 50% of capacity. We recommend that batteries be charged about once per half a year to prevent over discharge.

电池应当在室温下存放，应充到 30%至 50%的电量。如长时间储存，建议每半年充一次电以防止电池过放电。

11. Other The Chemical Reaction（其它的化学反应）

Because batteries utilize a chemical reaction, battery performance will deteriorate over time even if stored for a long period of time without being used. In addition, if the various usage conditions such as charge, discharge, ambient temperature, etc. are not maintained within the specified ranges the life expectancy of the battery may be shortened or the device in which the battery is used may be damaged by electrolyte leakage. If the batteries cannot maintain a charge for long periods of time, even when they are charged correctly, this may indicate it is time to change the battery.

由于电池是利用化学反应的原理，所以随时间的增加电池的性能会降低，即使是存放很长一段时间而不使用。如果使用条件如充电、放电及周围环境温度等情形不在指定的使用范围内，会使缩短电池的使用寿命，或者会产生漏液导致设备损坏。如果电池长周期不能充电，即使充电方法正确，这样需要更换电池了。

12.Note:（注释）

Any other items which are not covered in this specification shall be agreed by both parties.

本说明书未包括事项应由双方协议确定。

13. 电池保护电路 Protection Circuit:

适用范围：本技术规格书仅适用于 DW01-26MM　锂电池保护板，

Using scope:　The specification only applies to Li-ion battery protection module,

环保要求 Environment request　ROHS

13.1 技术规格 SPECIFICATIONS：

Topt=25℃

项目	符号	详细内容	标准
过充保护 Overcharge	V_{DET1}	过充电检测电压 Overcharge detection voltage	4.28±0.05V
	tV_{DET1}	过充电检测延迟时间 Over charge protection delay time	0.2s（MAX）
	V_{REL1}	过充保护恢复电压 Over charge release voltage	4.1±0.15V
过放保护 Over discharge	V_{DET2}	过放保护电压 Over discharge protection voltage	2.4V±0.1V
	tV_{DET2}	过放电检测延迟时间 Over discharge protection delay time	120ms（MAX）
	V_{REL2}	过放保护恢复电压 Over discharge release voltage	3.0V±0.1V
过流保护 Over current	V_{DET3}	放电过流检测电压 Over current detection voltage	150±30mV
	I_{DP}	放电过流检测电流 Over current detection current	3A±1A
	tV_{DET3}	放电过流保护延迟时间 Over current protection delay time	20ms（MAX）
		0 V battery charge function	Available
短路保护 Short circuit protection	T_{SHORT}	短路保护延迟时间 Short protection delay time	120μs（MAX）
		保护解除条件	断开短路电路
内阻 Impedance	R_{DS}	MOS 管导通内阻 Impedance Impedance Impedance	R_{DS}≤60mΩ
消耗电流	I_{DD}	工作时电路内部消耗	MIN：2.0μA MAX：6.0μA

13.2 应用原理图 Circuit Diagram：

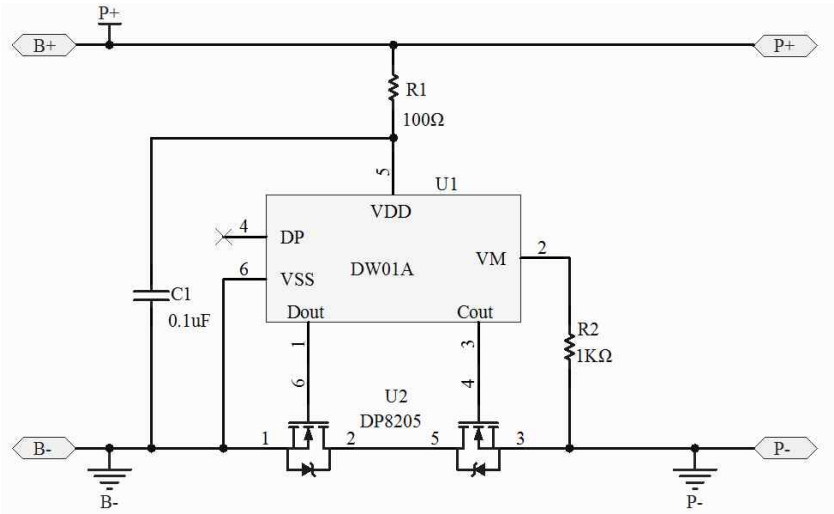

13.3 材料清单 PARTS LIST

序号 NO.	元件编号 Symbol	元件名称 Description	规格/型号 Spec./Model	封装形式 Pack Type	数量 Q'ty	
1	U1	IC	DW01	SOT-23-6	1	德普威
2	U2	MOSFET	8205A	SOT-23-8	1	德普微
3	R1	电阻 resistance	SMD 100Ω±5%	0603	1	厚声
4	R2	电阻 resistance	SMD 1KΩ±5%	0603	1	厚声
5	C1	电容 Capacitance	SMD 0.1μF±20%	0603	1	三星
6		PCB	16.0*3.5*0.6/±0.1mm		1	

产品外观图

外形尺寸		尺寸示意图
厚度（T）：	**5.0**+0.2 /–0.4mm	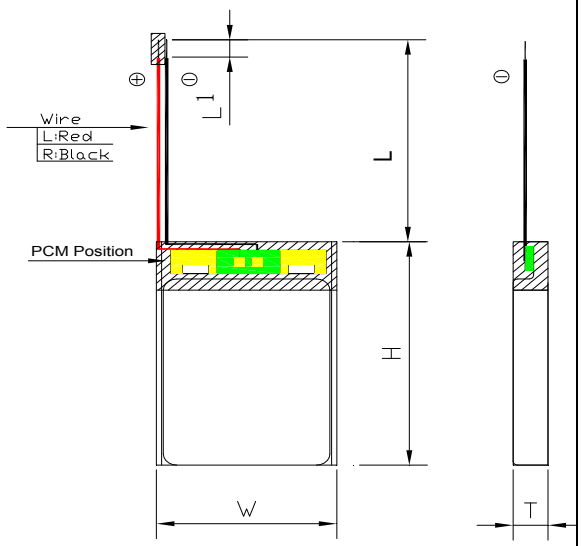
宽度（W）：	**30**.0+0.5 /–0.5mm	
高度（H）：	**36**.0+1.5/-0.5/mm	
外漏线长（L）：	40mm/+5/-5mm	
线经（Ø）：	1.0±0.02 mm	
Connector	**1.25mm**	
喷码内容：	- TW 503035 3.7V +500mAh 1.85Wh AH01 备注：字体仅供参考	
L1：	1.25mm	L1：